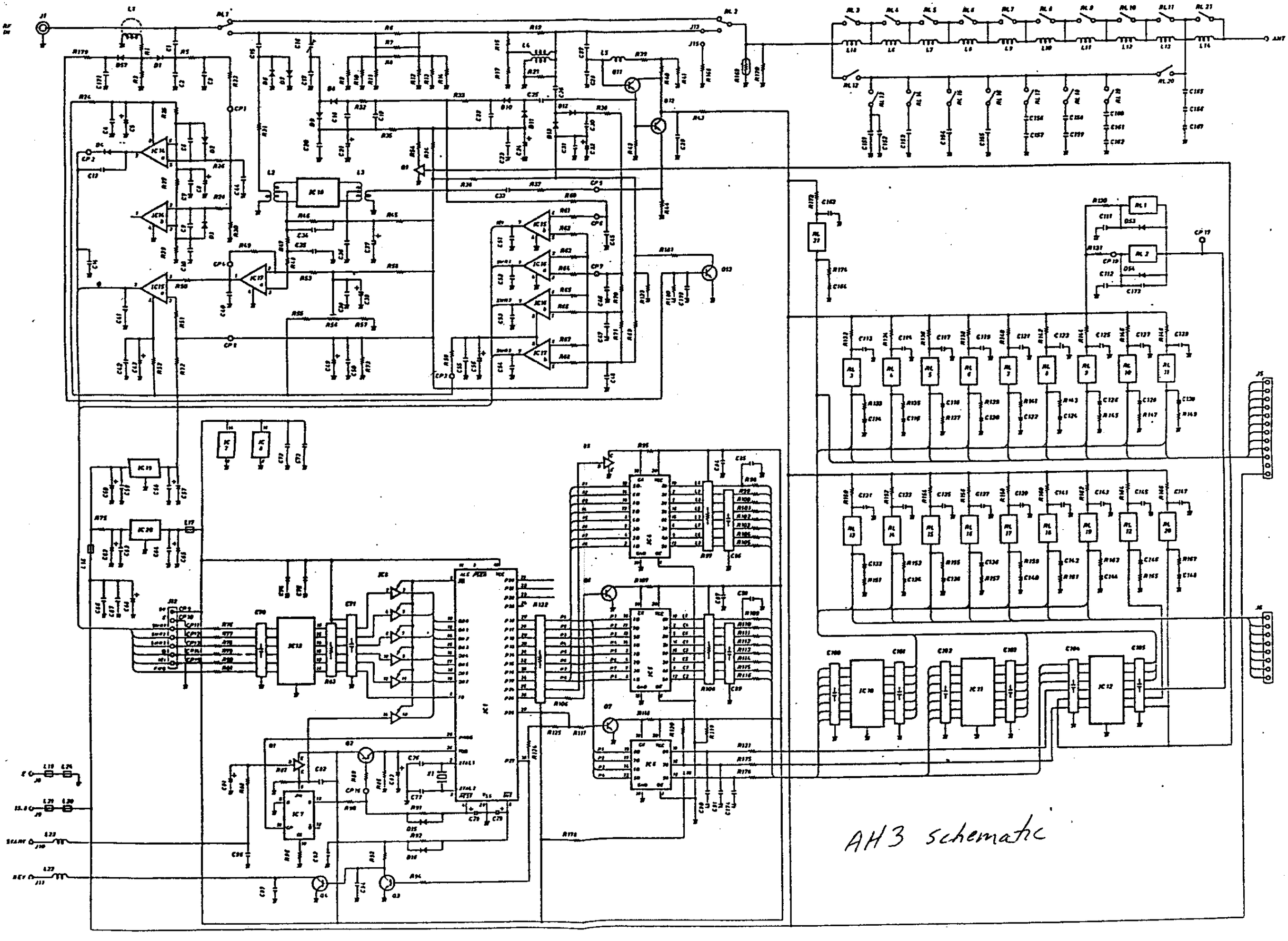

AH3 schematic